Infrared Flame Detector

EDFS1 2831-CPR-F4777 506g/03 EN54-10:2002+A1:2005

EDFS2 2831-CPR-F4778 506g/04 EN54-10:2002+A1:2005

UKCA 0832 23

1. Introduction

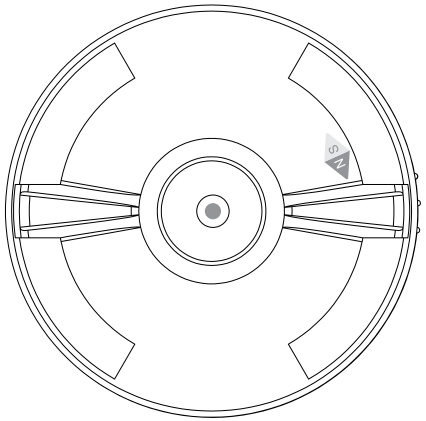

Single flame detector

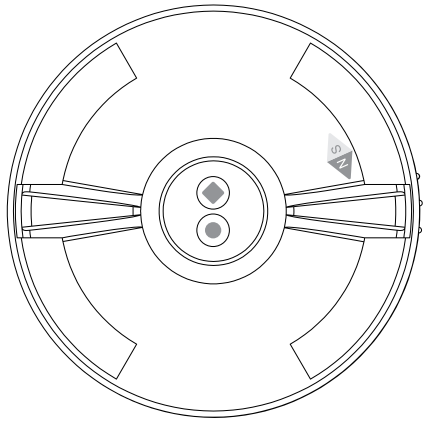

Dual flame detector

2. Operating Principle

This product uses the middle of infrared spectrum which can analyze infrared radiation emitted by fire. Making use of infrared inductor can measure distinctive CO2 produced from fire. The analysis from receiving signals is a combination of digit & analog data to deal with latent danger to print out alarm data with high-accuracy.

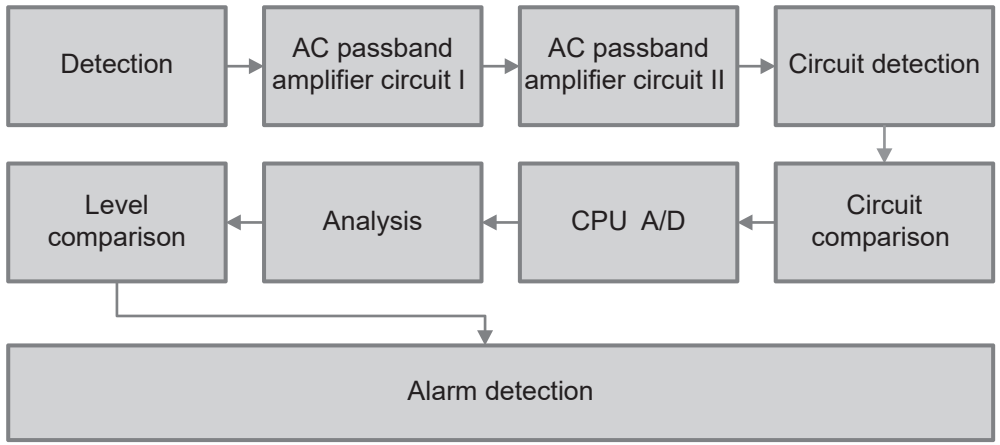

3. Characteristics

- Red dual LED for fire alarm
- Magnetic test for simulated detection

4. Specifications:

Model	EDFS1	EDFS2
Type	2-wire	2-wire
Alarm Contact	N/A	N/A
Sensor Type	Single IR	Dual IR
Wavelength	4.48μm	4.48μm 3.38μm
Standby Current @24V dc 470Ω	190μA	310μA
Voltage Range	12V~30V dc	12V~30V dc
Alarm Current @24V dc 470Ω	38mA	38mA
Ambient Temperature	-10°C+55°C	-10°C+55°C
Material	Fire-proof plastic	Fire-proof plastic
Dimensions	102 mm (Dia.) × 38 mm (H)	102 mm (Dia.) × 38 mm (H)
Weight	About 120g	About 120g
Color	White	White

Comply with EN54-10 Class 1

A maximum angle of reception of ± 30° from the centre line of the device in vertical and Horizontal planes shall not be exceeded.

The manufacturer preforms the test with a brazier by itself, and it can move up to 40 meters away.

5. Magnetic Test

Close the Detector Testing Device to the sticker on the detector to simulate action.

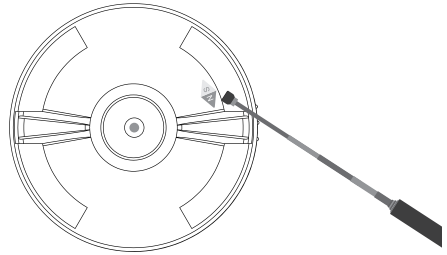

6. Recommended Mounted Location

- **Premises with higher ceilings :** theater, gym, storage, gallery or warehouse, etc.
- **Places where fires happen easily :** places storing with combustible goods, gas stations, factory working places, machine rooms, etc.
- **Ventilate places :** open markets, station platforms, hotel lobbies, department stores, etc. (places that smoke and heat cannot gather during early period of fire)
- **Others :** tunnels, computer rooms, etc.

7. Not recommended Mounted Location

- **Places with amount of smoke flows to.**
  (diet preparation room, front room of kitchen, food storage in kitchen, corridor and passageway around kitchen and restaurant…)
- **Places with amount of steam retains.**
  (steam clean room, dressing room, hot water service room and disinfection room…)
- **Places smelled off subversive gas.**
  (electroplating factory, accumulator room and sewage treatment plant…)
- **Places equipped with fire devices or exposed to fire.**
  (glass factory, placed with iron melting furnace, welding workplace, kitchen, foundry and forging…)
- **Places with high temperature or any other places where may bring about barriers to detectors.**
- **Places with sunlight beating or reflecting.**

8. Maintenance

There is no need to clean & maintain. Please just keep the glass surface of detectors clean to assure it is under normal condition.

9. Attentions

Prohibit from taking down the product to overhaul or make a change to it.

10. Dimension Diagram

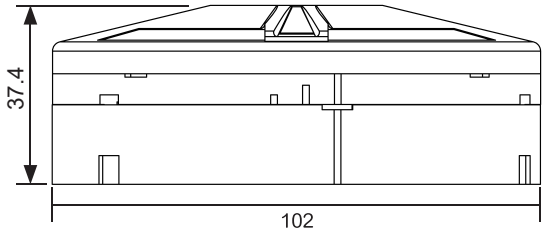

Unit: mm

11. Unit Connection Diagram

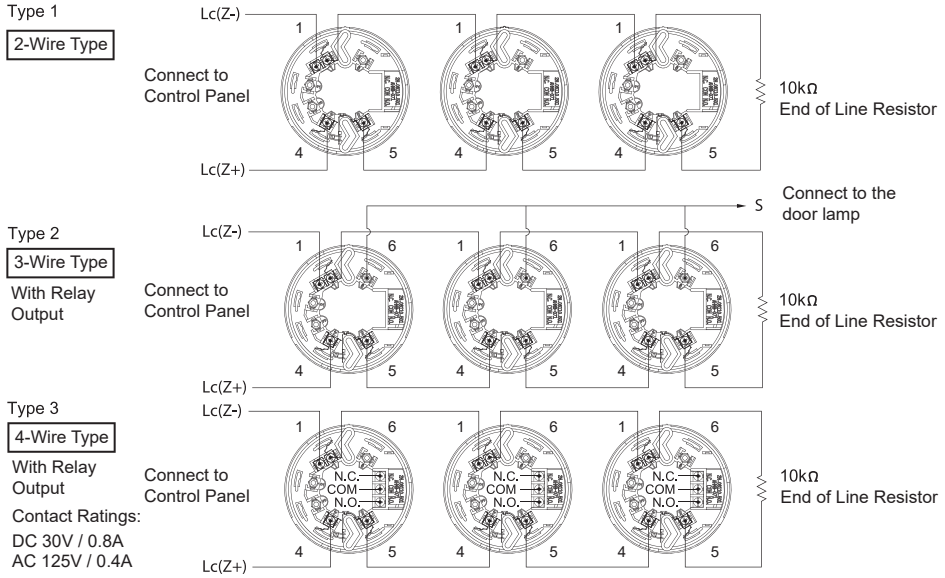

DC power supply wiring diagram

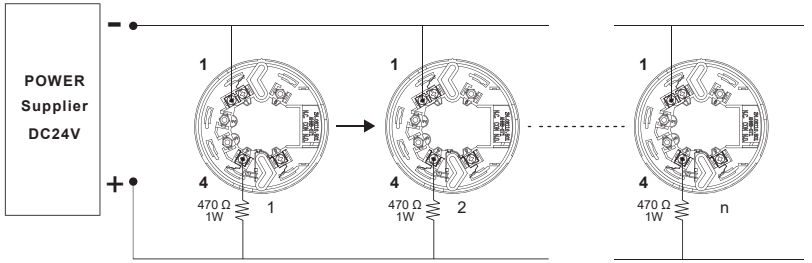

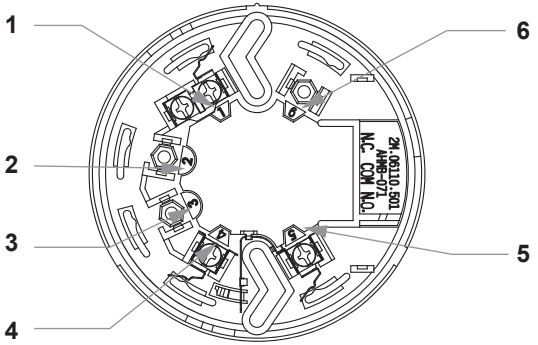

P/N:1O.EDFS0.M01 Ver.F

Infrared Flame Detector

EDFS1 / EDFS2

HORING LIH INDUSTRIAL CO., LTD.